No.of Contact	Cable Jacket	Cable OD(mm)	AWG	Temperature range	Item No.
4P	PVC	8.2	16	-20~105°C	M12S-04BMMM-SR8GXX
3P		7.5			M12S-03BMMM-SR8GXX
4P	TPU	8.5		-25~85°C	M12S-04BMMM-SR8SXX
3P		7.8			M12S-03BMMM-SR8SXX

REV.	ECN NO.	DATE	SIGN	DESCRIPTION
A	initial release	2021-09-28	Li Dai	Rew.01 to Rve.A
B	C211568	2021-10-15	Li Dai	B X1

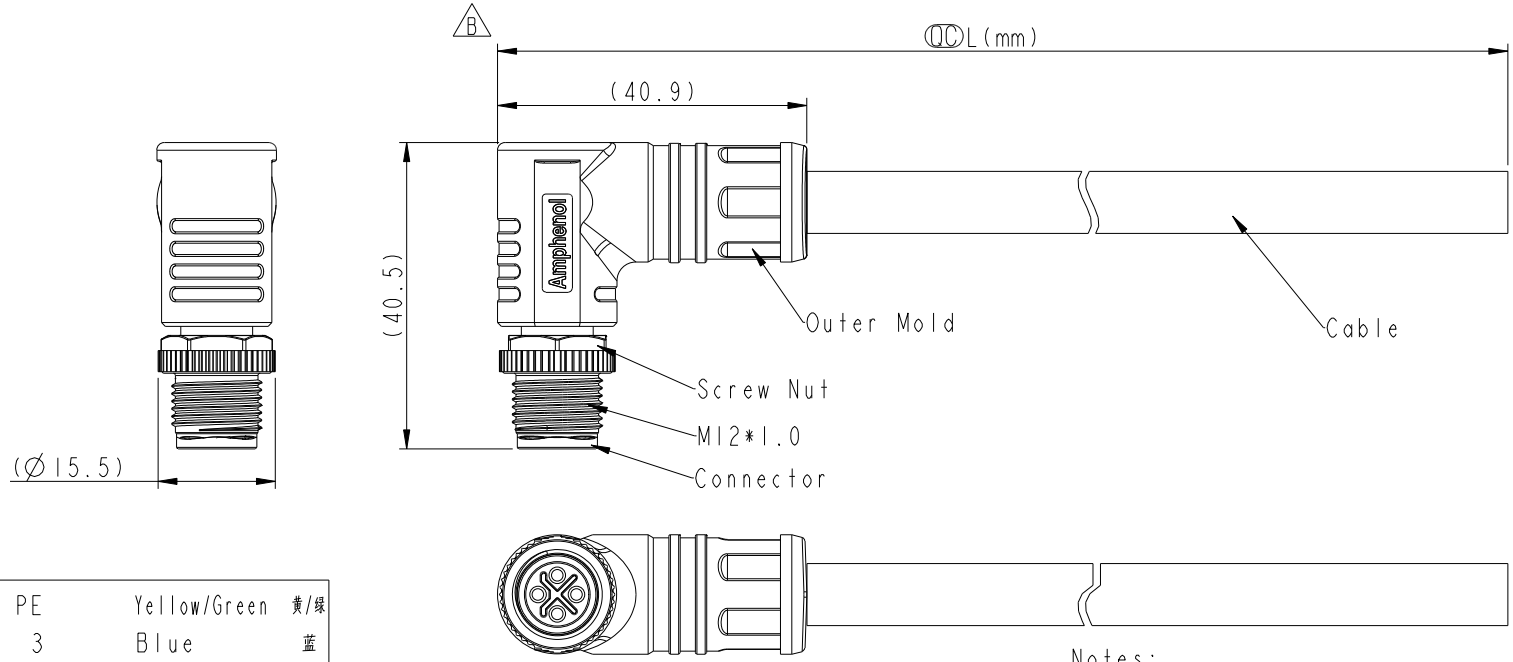

Pin #	Wire		Pin #	Wire	
PE	Yellow/Green	黄/绿	PE	Yellow/Green	黄/绿
3	Blue	蓝	3	Blue	蓝
			2	White	白
1	Brown	棕	1	Brown	棕

Pin Out

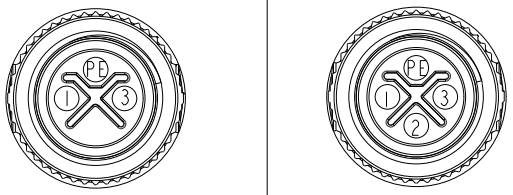

2+PE 3+PE

Pin Assignments Front View

M12S-XXBMMM-SR8XXX

- XX: 01~99 Meters
  - 01: 01 Meter
  - 02: 02 Meters
  - .
  - .
  - 99: 99 Meters
- G: Cable UL2586, PVC Jacket, Black.
- S: Cable UL20234, TPU Jacket, Black.
- No. of Pin

Notes:

* QC Important Dimension to Check.
* Waterproof Rate: IP68(1M, 24Hours).
* Connector: Thermoplastic, Black.
* Male Pin: Copper Alloy, Gold Plated.
* Screw Nut: Metal
* Rated Voltage: 630V
* Rated Current: 12A.
* Cable Length Tolerance: 01M:+50/-0mm
  - >02M~03M:+100/-0mm
  - >03M~05M:+150/-0mm
  - >05M~10M:±100mm
  - >10M~20M:±200mm
  - >20M~30M:±300mm
  - >30M~99M:±500mm

UNIT:mm

TOLERANCE ±0.5mm

TITLE: M12 S Code,R/A,Metal Screw Nut, Male Conn + Cable

SCALE 1:1 | SIZE A4 | SHEET 1 OF 1

REV. B | WC-REV. .0 | QC:Inspection item

Amphenol LTW

安費諾亮泰企業股份有限公司

ITEM NO	DRAWN BY Li Dai	DATE 2021-09-28
DWG NO M12S-XXBMMM-SR8XXX	CHECKED BY Fisher Wang	DATE 2021-09-28
CUSTOMER ALTW	APPROVED BY Max Yang	DATE 2021-09-28

WI0814-03-A□01A2

THIS DOCUMENT IS SUBJECT TO CHANGE WITHOUT NOTICE. IT IS CONFIDENTIAL AND A PROPERTY OF Amphenol LTW. DISCLOSURE TO THIRD PARTY HAS TO BE AUTHORIZED BY Amphenol LTW.