REV.	ECN NO.	DATE	SIGN	DESCRIPTION
B	LEN-790195	2007/09/13	WUFEI	Change Nut
C	LEN-920157~60	2008/10/07	Li Xiu Zhi	Change View
D	LEN1710078~82	2017/01/17	Ruru	Change Logo

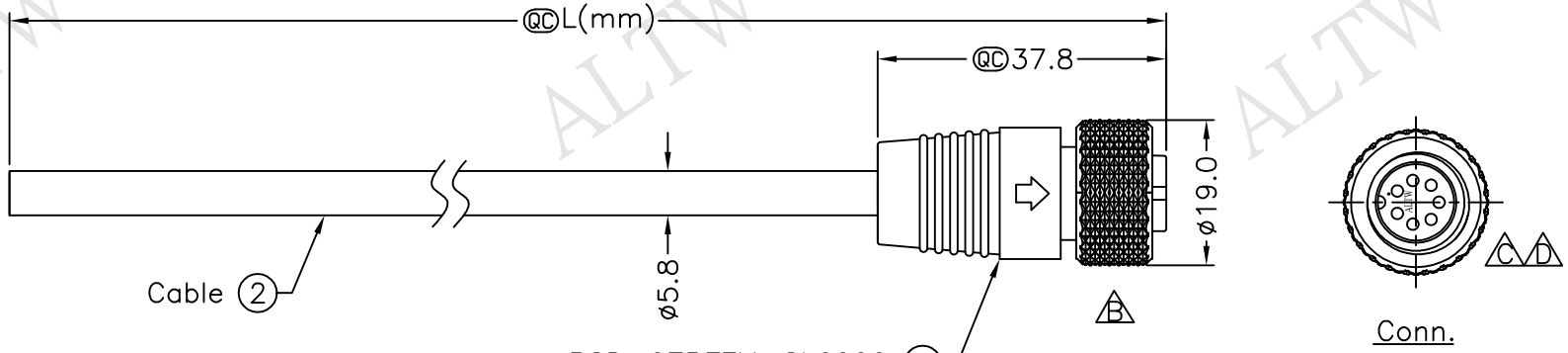

BSD-07BFFM-SL6000 1
Color: Black

BSD-07BFFM-SL6AXX

XX:01~99Meter
01:01Meter
02:02Meters
:
:
99:99Meters

Cable Length(L):01~99Meters

ALTW DCC. DEPT. CONFIDENTIAL 2017.01.18 ISSUED

ALTW CONFIDENTIAL 2017.01.17 R&D DEPT.

Note:
* QC Important Dimension To Check.
* Waterproof Rate: IP66
* Housing: Black, Nylon+GF
* Pin: Brass, Gold Plated
* UL2464 24AWG*7C+Drain+ Al/My,Black PVC Jacket UV Resistant, OD=5.8
C * Cable Length Tolerance:01M:40mm
02M~05M:60mm
06M~10M:100mm
11M~30M:200mm
31M~99M:500mm

C D

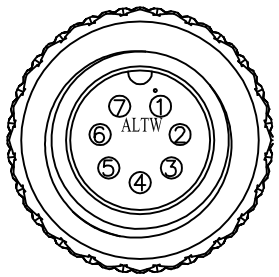

Pin Assignments
Front View

Conn.	Wire Color	Pin Out
7	White	白
6	Green	綠
5	Brown	棕
4	Red	紅
3	Yellow	黃
2	Orange	桔
1	Blue	藍

UNIT:mm	TITLE: Standard Cable Screw 7Pin F Conn F Pin	Amphenol LTW 安費諾亮泰企業股份有限公司	ITEM NO	DRAWN BY: Ruru	DATE: 2017/01/17
TOLERANCE: ±0.5 mm	SCALE: Free / SHEET: 1 OF 1		DWG NO: BSD-07BFFM-SL6AXX	CHECKED BY: Rita	DATE: 2017/01/17
	REV.: D / SIZE: A4 / QC :Inspection Item		CUSTOMER: ALTW	APPROVED BY: Max	DATE: 2017/01/17

THIS DOCUMENT IS SUBJECT TO CHANGE WITHOUT NOTICE. IT IS CONFIDENTIAL AND A PROPERTY OF Amphenol LTW. DISCLOSURE TO THIRD PARTY HAS TO BE AUTHORIZED BY Amphenol LTW.