REV.	ECN NO.	DATE	SIGN	DESCRIPTION

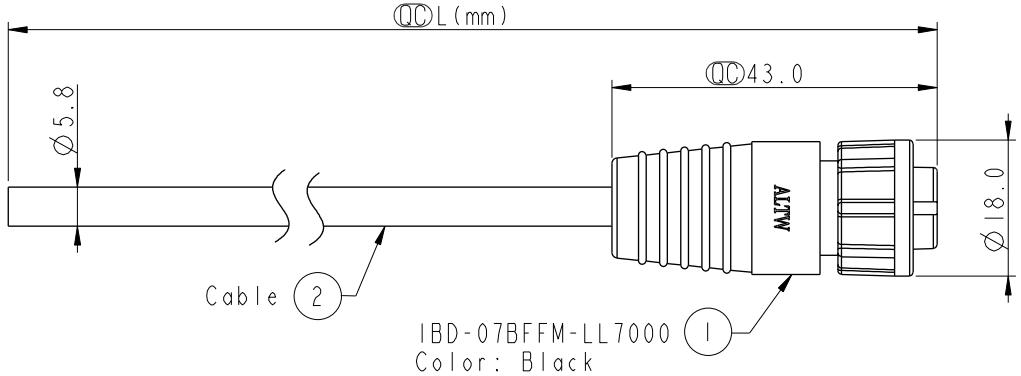

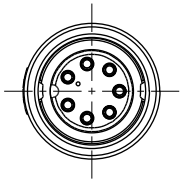

Conn.

ALTW DCC. DEPT. CONFIDENTIAL 2014.01.21 ISSUED

ALTW CONFIDENTIAL 2014-01-08 R&D DEPT.

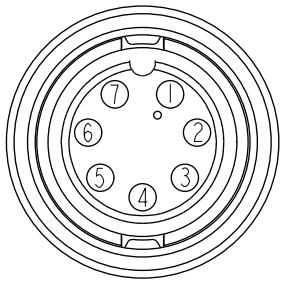

Pin Assignments
Front View

Conn.	Wire Color	
7	White	白
6	Green	綠
5	Brown	棕
4	Red	紅
3	Yellow	黃
2	Orange	橙
1	Blue	藍

Pin Out

IBD-07BFFM-LL7AXX

XX :01~99Meters
01 :01Meter
02 :02Meters
:
:
99 :99Meters

Cable Length(L):01~99Meters

Note:
* QC Important Dimension To Check
* Waterproof Rate: IP67
* Housing: Nylon+GF, Black
* Female Pin: Copper Alloy, Gold Plated
* Lock Nut: Nylon+GF, Black
* O-Ring: Silicon, Gray
* Cable: UL2464 24AWG*7C+D+AL/My
  PVC Jacket UV Resistant, OD=5.8, Black
* Cable Length Tolerance: 01M: ±40mm
  02M~05M: ±60mm
  06M~10M: ±100mm
  11M~30M: ±200mm
  31M~99M: ±500mm

UNIT: mm

TOLERANCE ± 0.5 mm

TITLE: STANDARD CNC PIN CABLE LOCK 7PIN F CONN F PIN

SCALE 1:1 | SIZE A4 | SHEET 1 OF 1

REV. A | WC-REV. A.1 | QC: Inspection item

Amphenol LTW
安費諾亮泰企業股份有限公司

ITEM NO	DRAWN BY	DATE
	Ruru	2014-01-08
DWG NO: IBD-07BFFM-LL7AXX	CHECKED BY: Tony	DATE: 2014-01-08
CUSTOMER: ALTW	APPROVED BY: Victor	DATE: 2014-01-08

FMW10702-01-02A1

THIS DOCUMENT IS SUBJECT TO CHANGE WITHOUT NOTICE. IT IS CONFIDENTIAL AND A PROPERTY OF Amphenol LTW. DISCLOSURE TO THIRD PARTY HAS TO BE AUTHORIZED BY Amphenol LTW.